

TUBS MODULAR

WALL

LedsC4



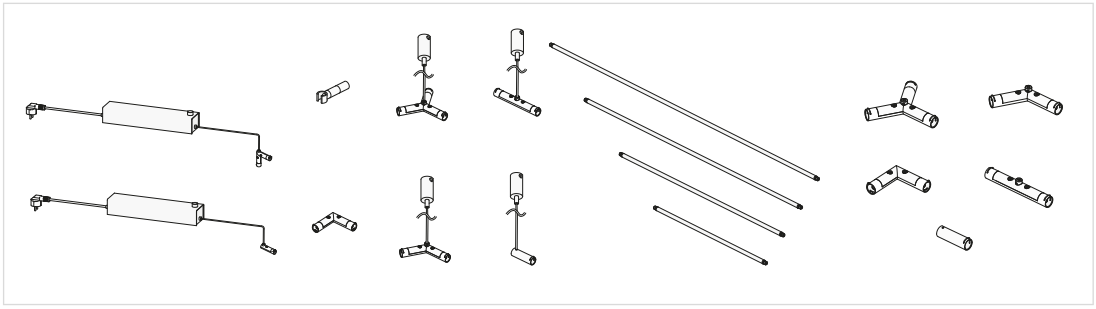

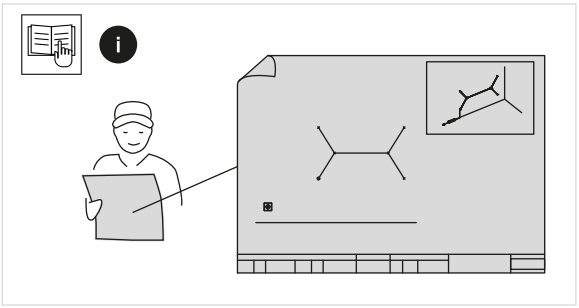

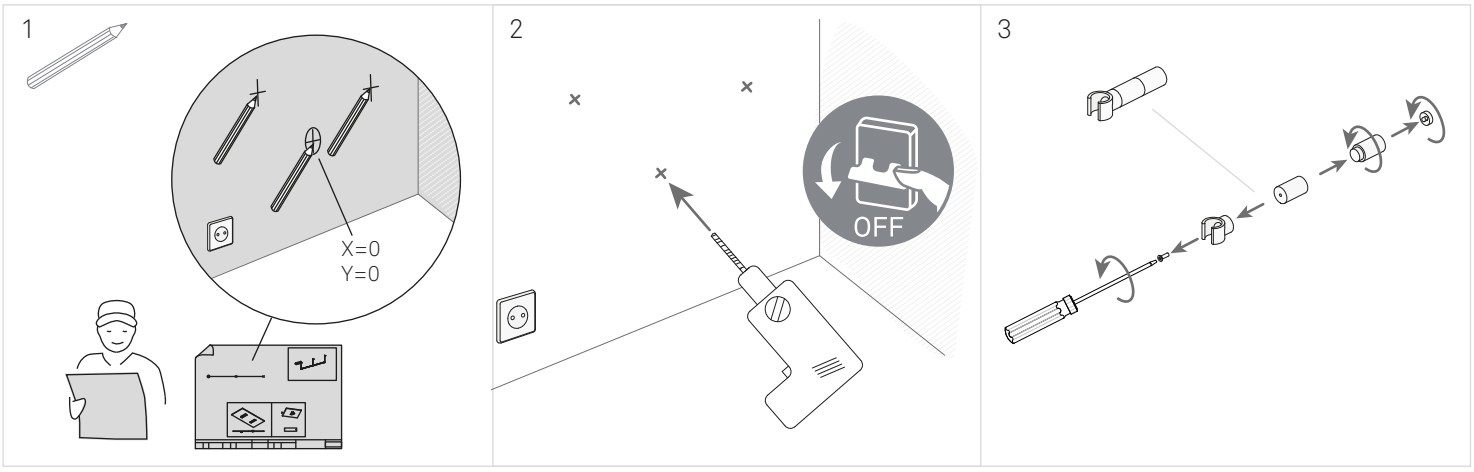

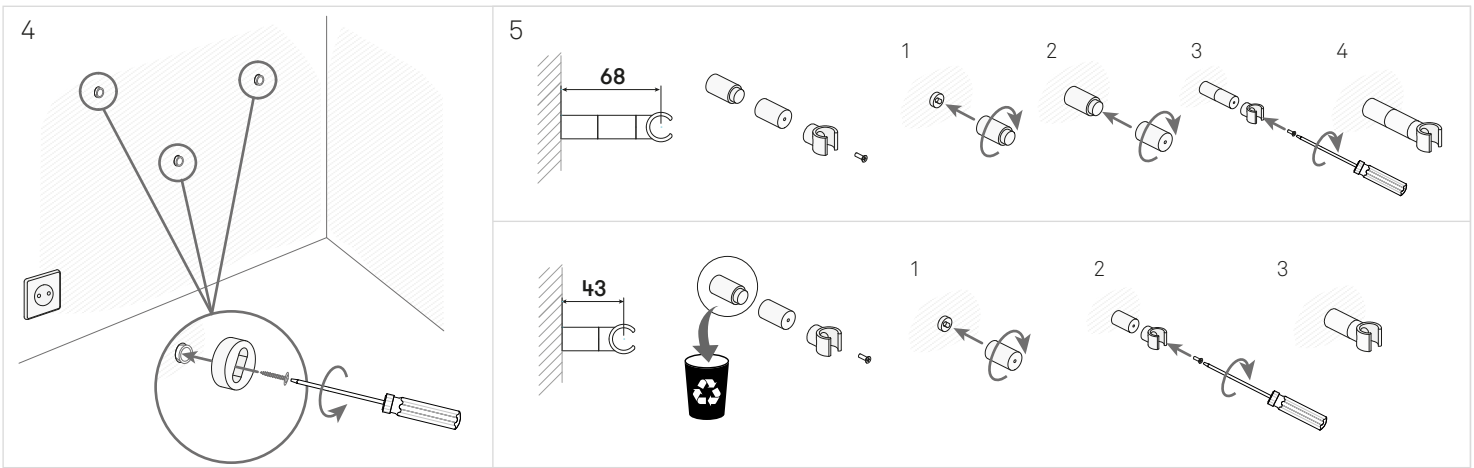

6

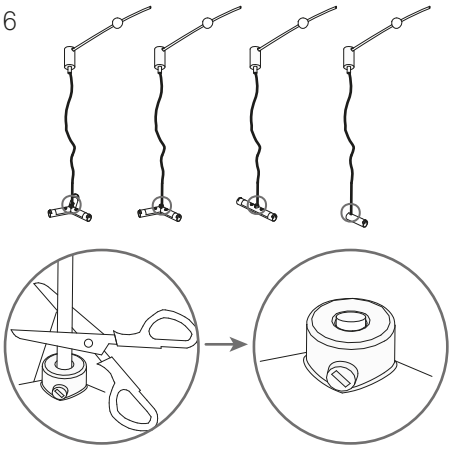

7

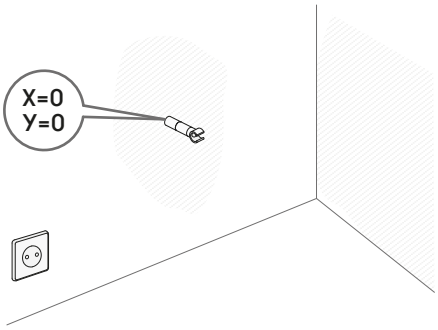

8

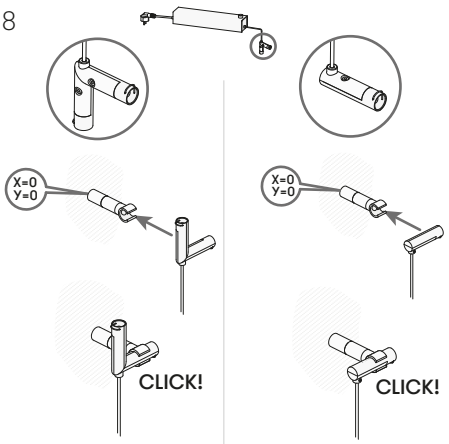

9

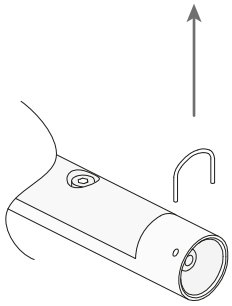

10

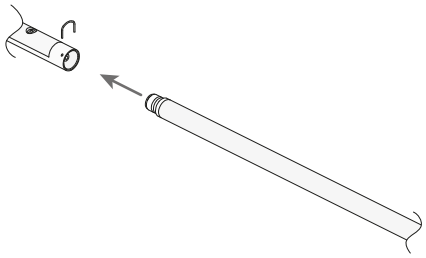

11

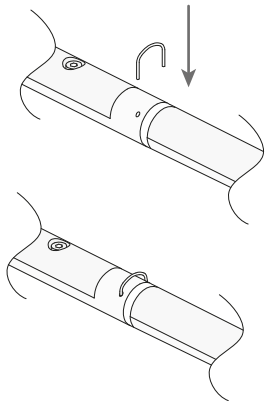

12

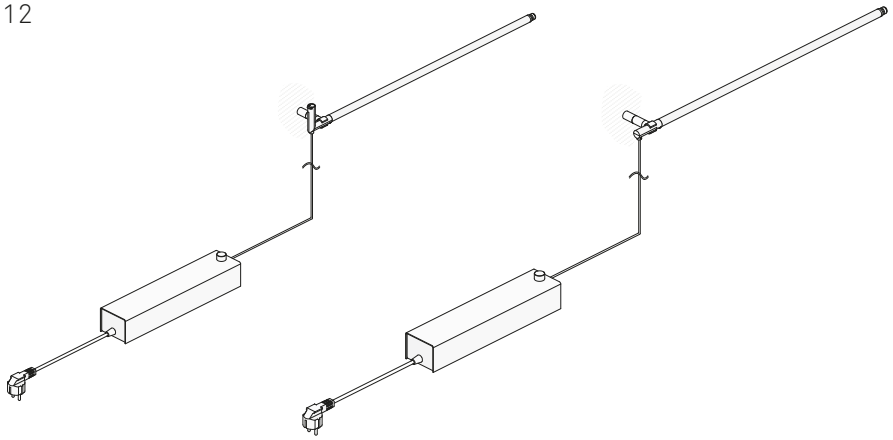

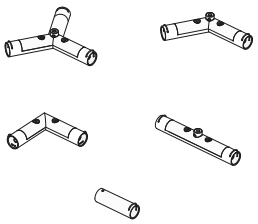

⚠ 71-8263

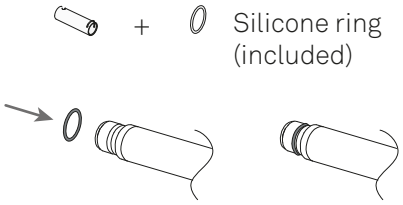

1

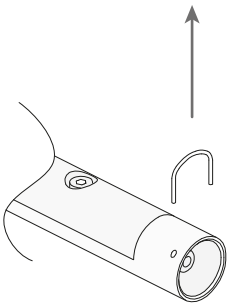

2

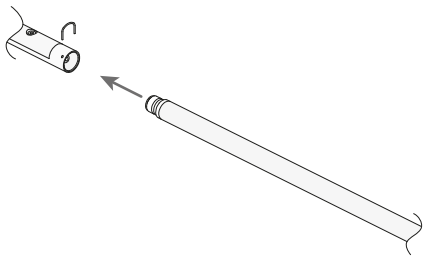

3

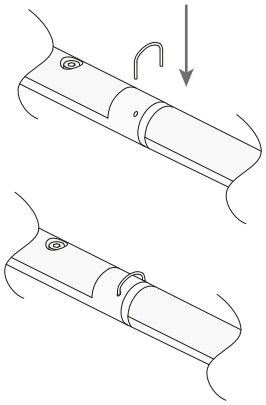

4

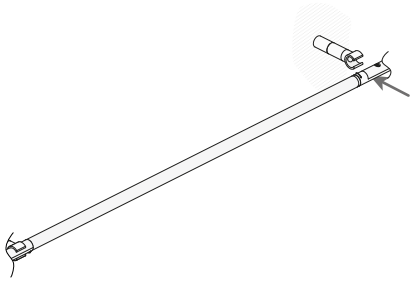

5

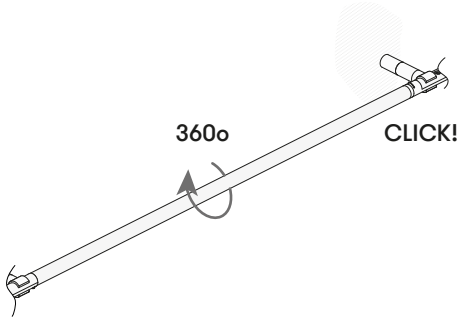

6

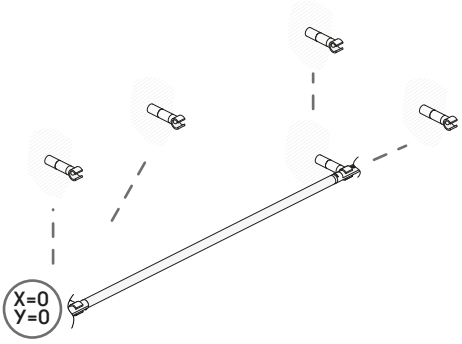

7

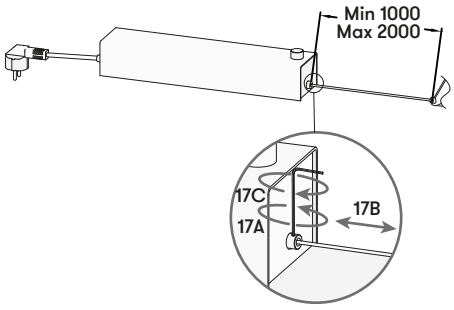

8

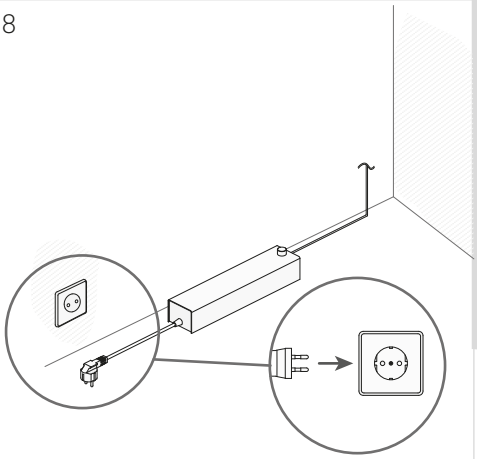

9

