Hop

LedsC4

ADVERTENCIA: RIESGO DE ESTRANGULAMIENTO.Para reducir el riesgo de estrangulamiento, el cableado flexible conectado a esta luminaria debe estar fijado a la pared de forma eficaz si el cableado está en el volumen accesible a la mano.

WARNING: RISK OF STRANGULATION. To reduce the risk of strangulation. The flexible wiring connected to this luminaire must be effectively fixed to the wall if the wiring is in a volume accessible to the hand.

POWER STARTERS

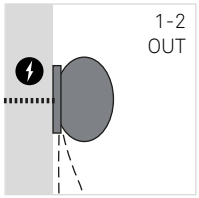

WALL CANOPY

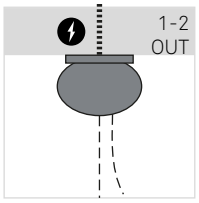

CEILING CANOPY

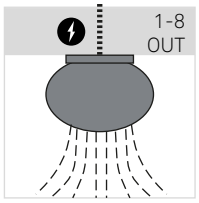

CEILING CHANDELIER CANOPY

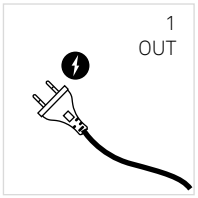

CONNECTION

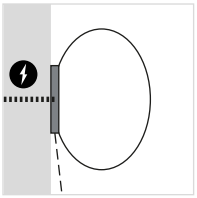

WALL LIGHT FIXTURE

LIGHT FIXTURES

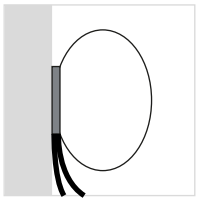

WALL LIGHT FIXTURE

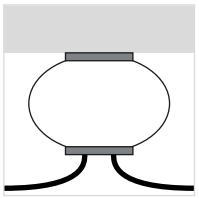

CEILING LIGHT FIXTURE

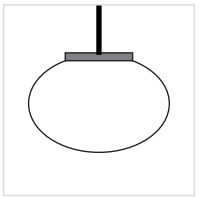

PENDANT LIGHT FIXTURE

ACCESSORIES

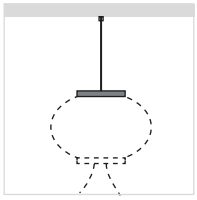

PENDANT KIT FOR CEILING FIXTURE

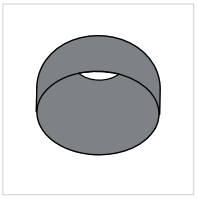

DECORATIVE SHADE



TEXTILE WIRES

POWER STARTER

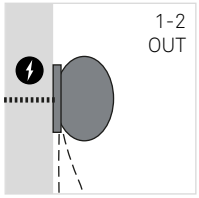

WALL
CANOPY



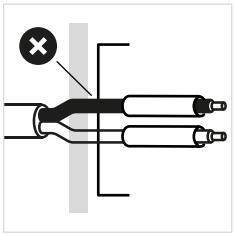

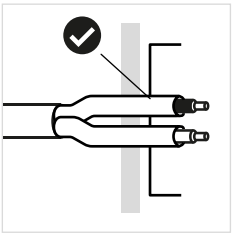

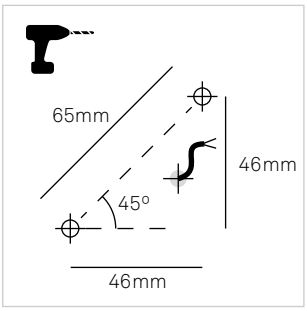

1

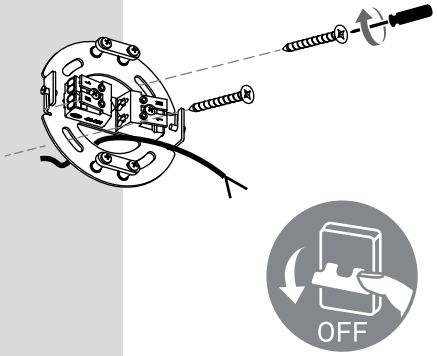

2

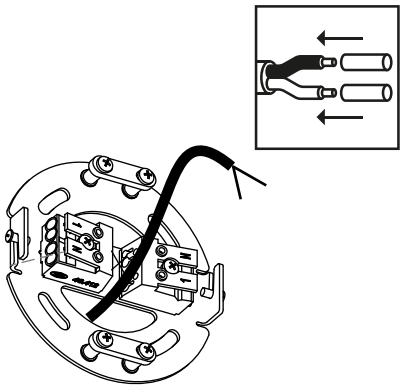

3

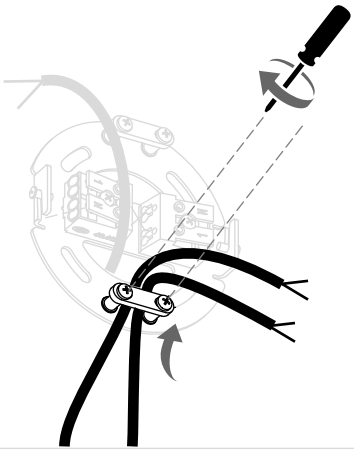

4

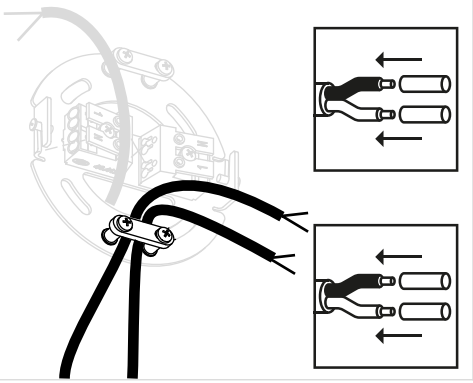

5

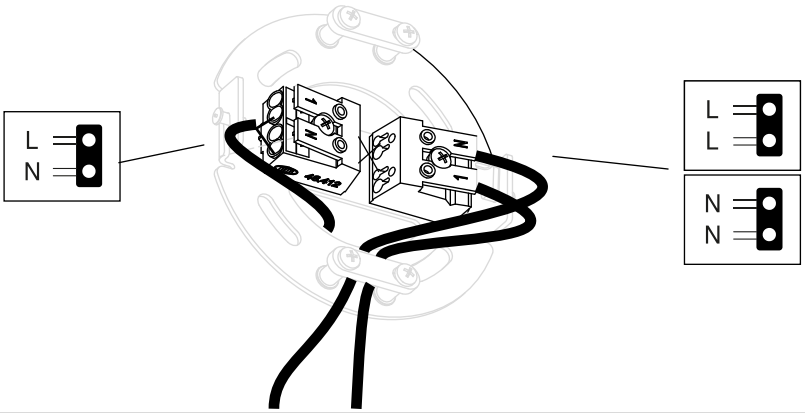

6

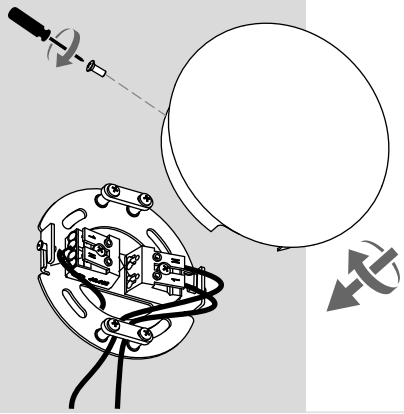

7

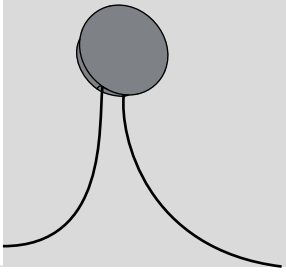

POWER STARTER

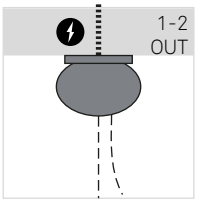

CEILING
CANOPY



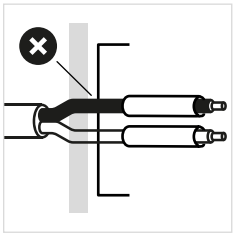

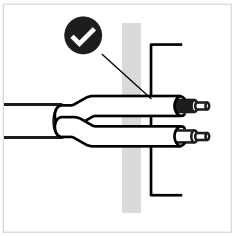

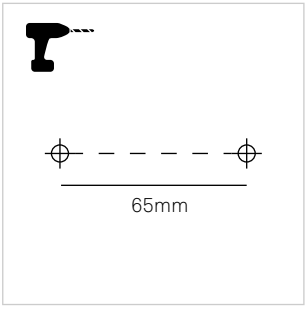

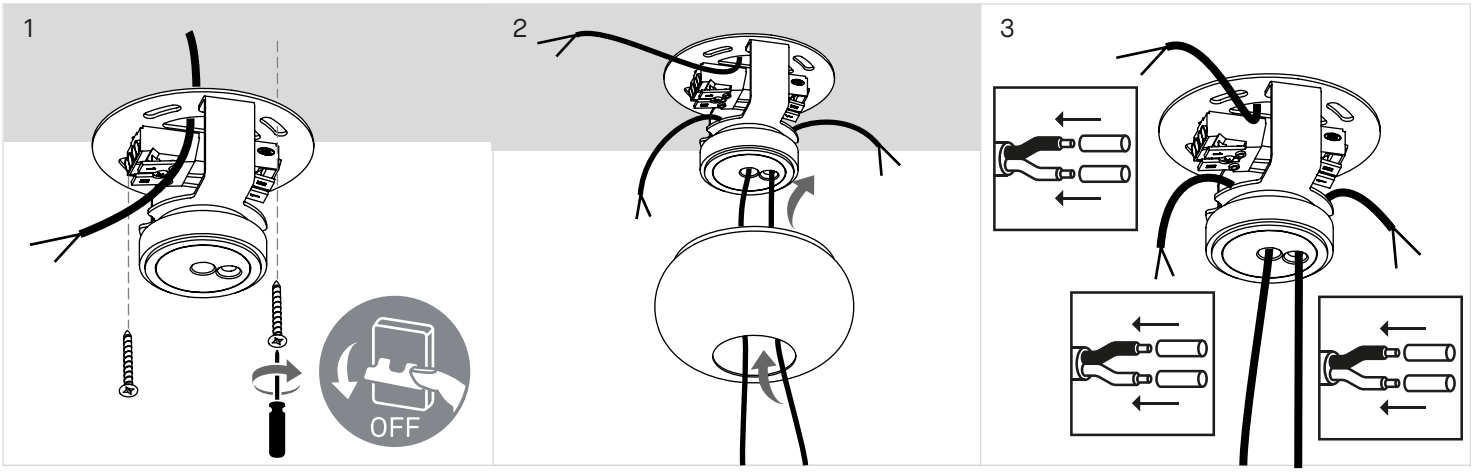

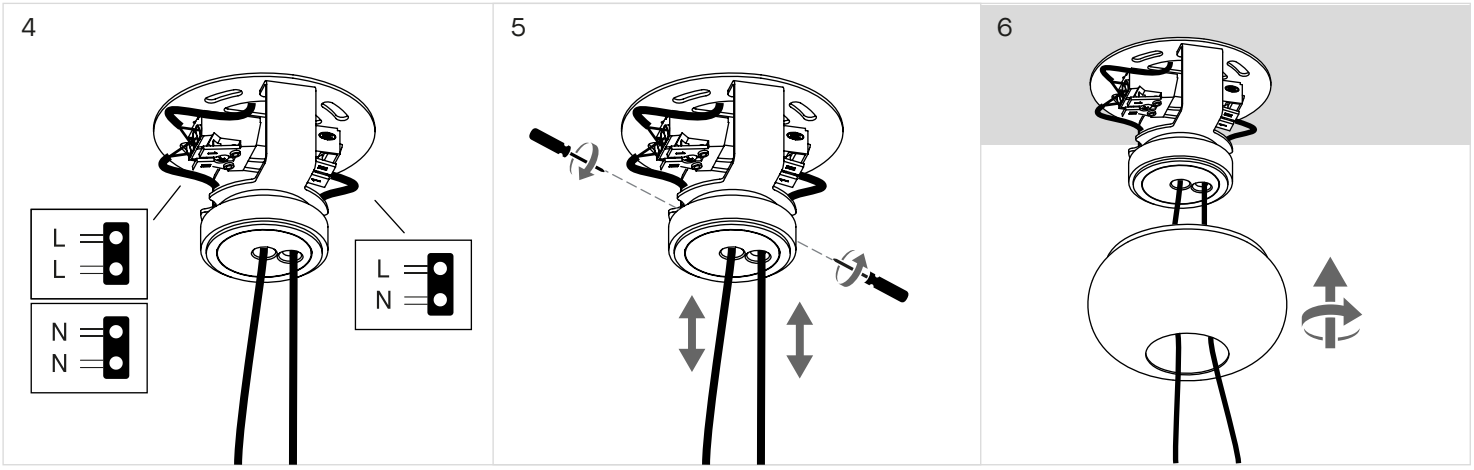

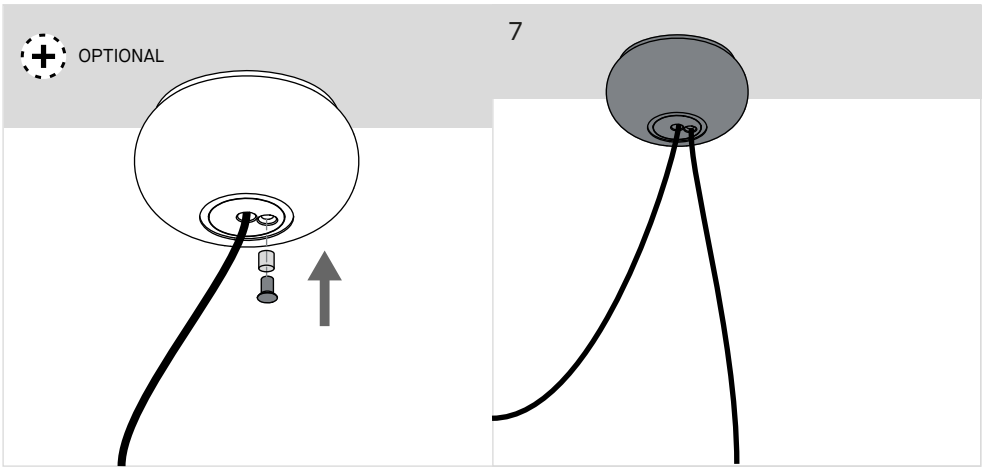

POWER STARTER

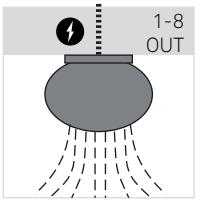

CEILING
CHANDELIER
CANOPY



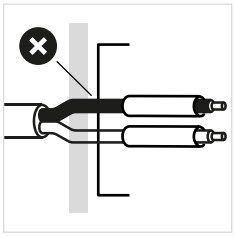

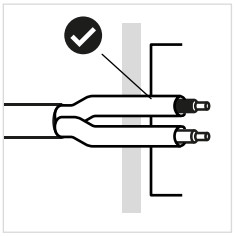

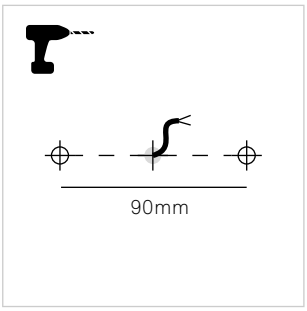

1

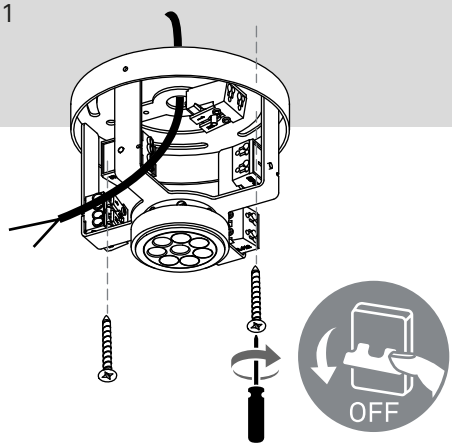

2

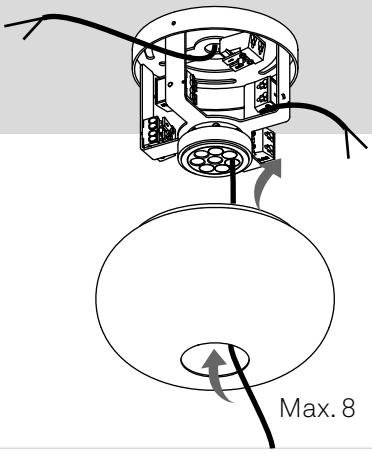

3

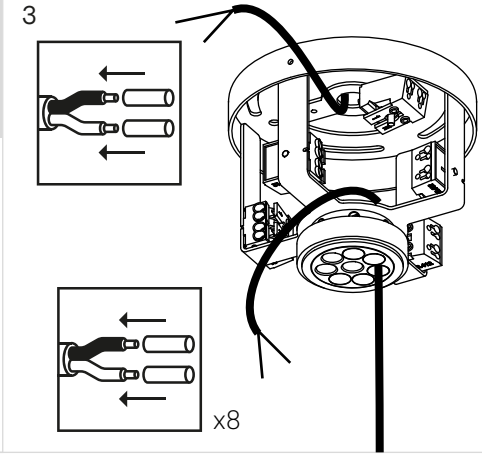

4

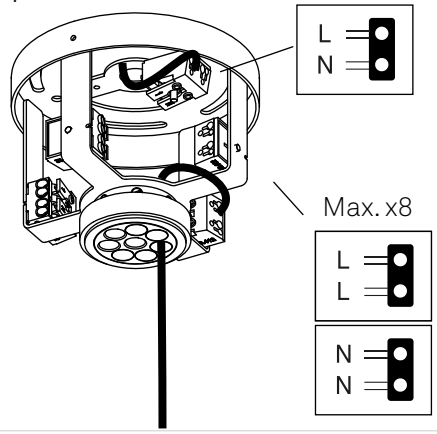

5

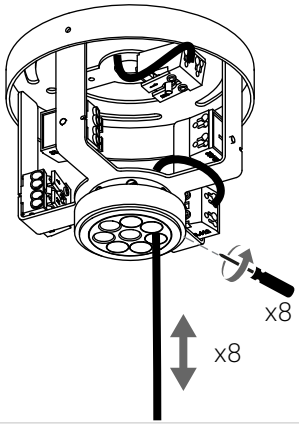

6

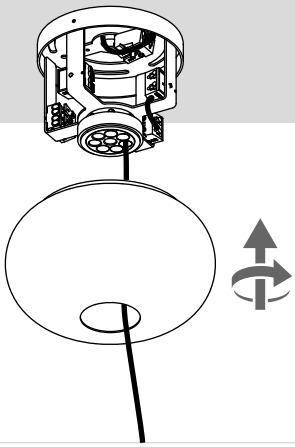

OPTIONAL

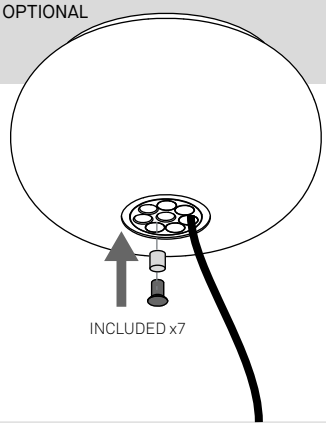

7

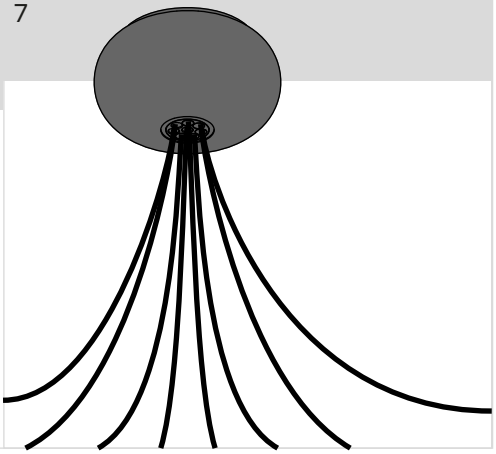

POWER STARTER

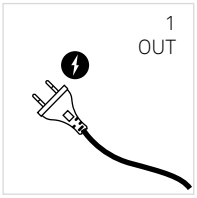

CONNECTION



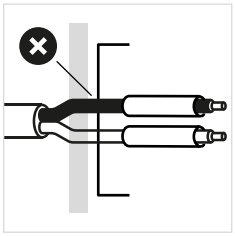

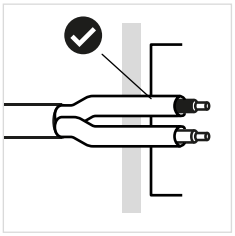

MAX
5
LIGHT FIXTURES

1



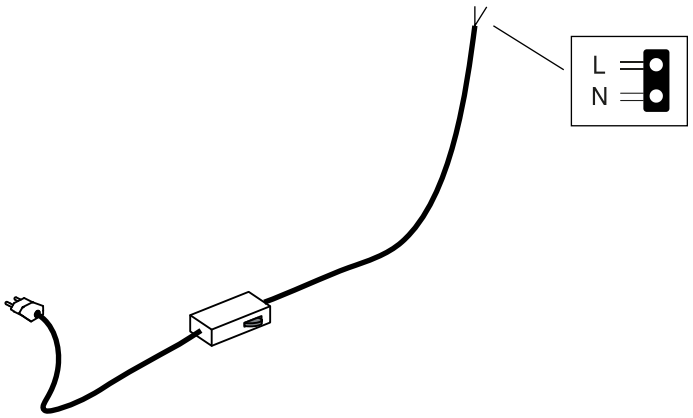

2

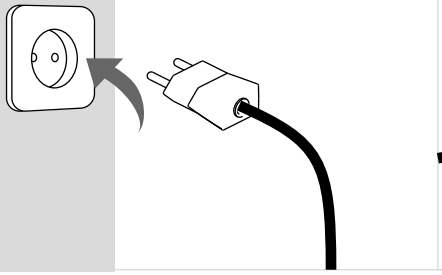

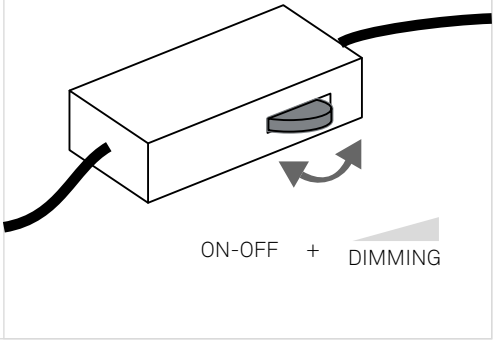

POWER STARTER / LIGHT FIXTURE

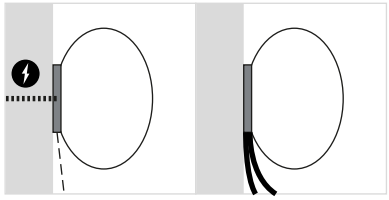



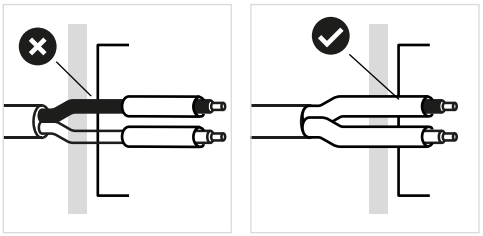

WALL LIGHT FIXTURE

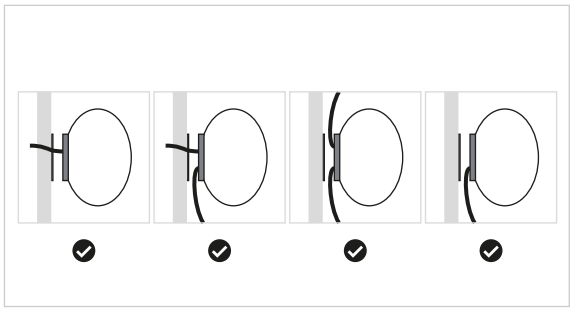

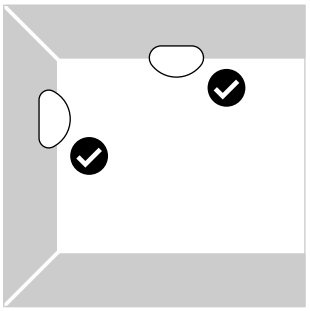

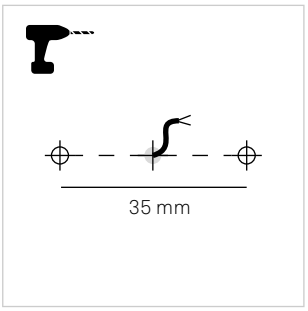

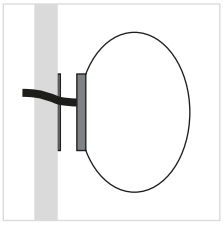

1

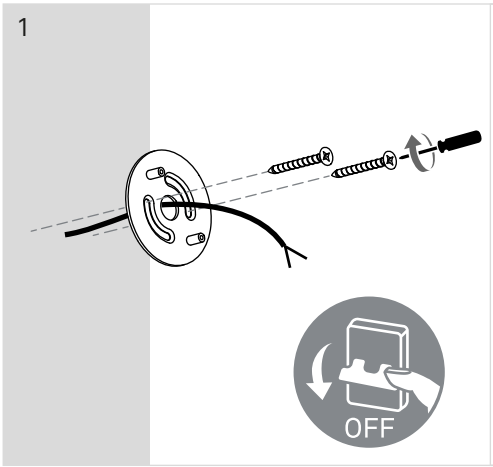

2

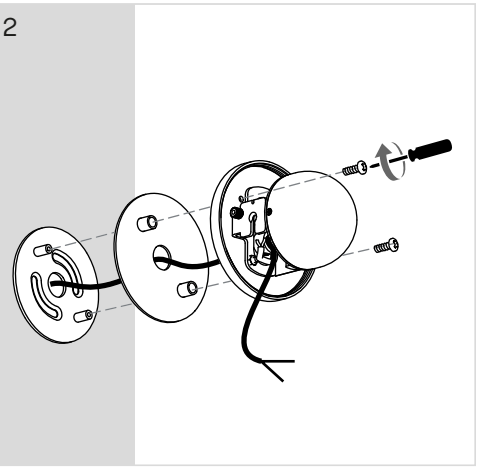

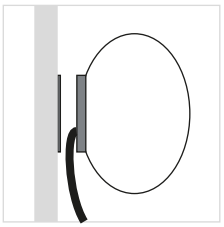

1

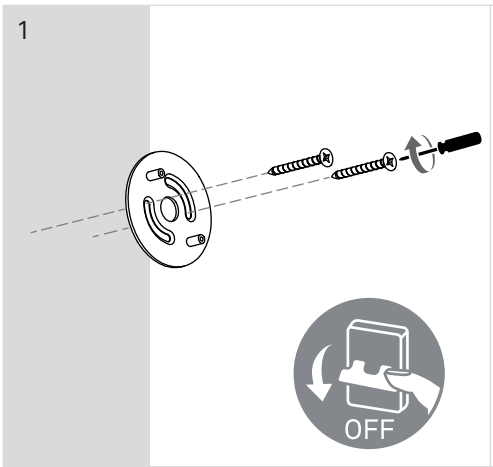

2

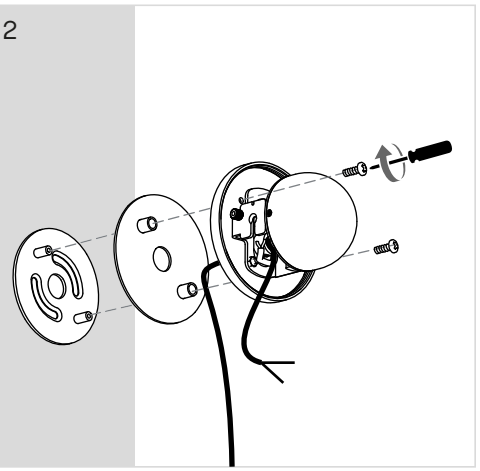

3

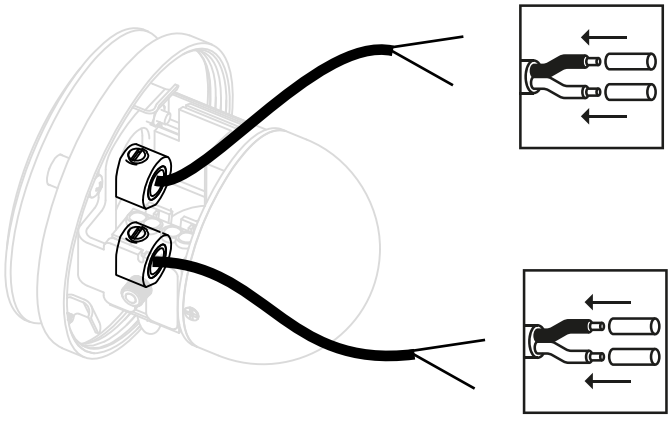

4

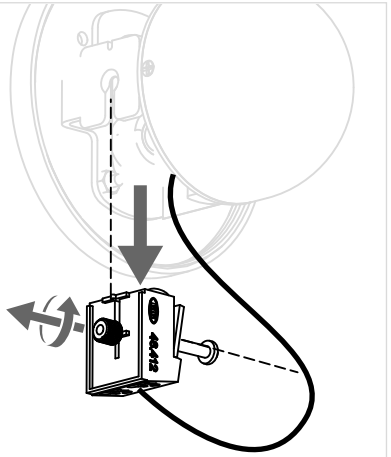

5

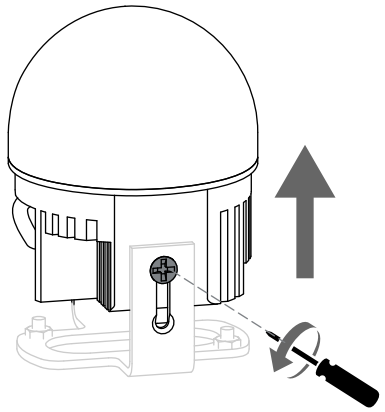

6

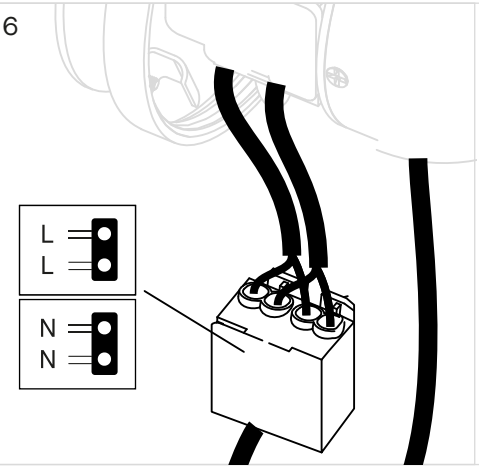

7

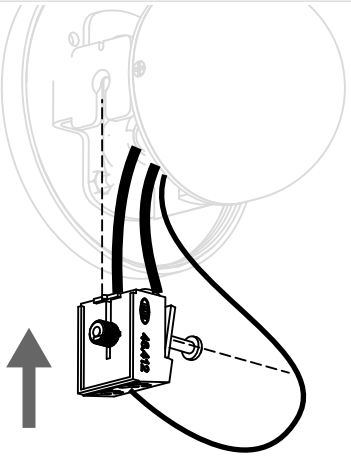

8

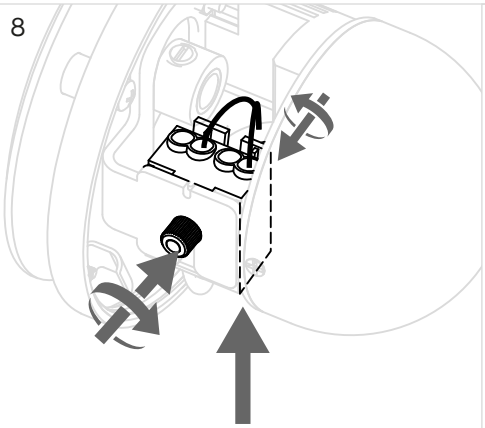

9

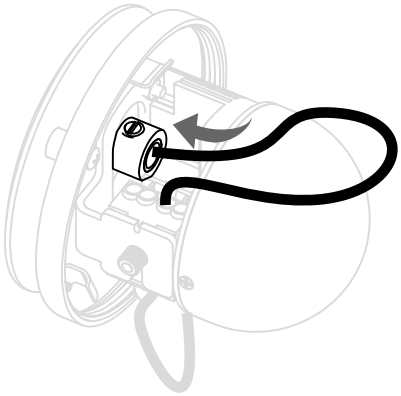

10

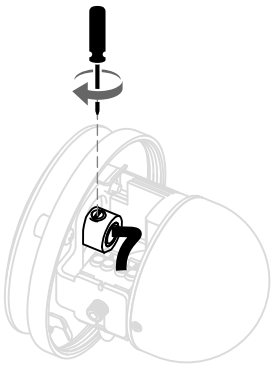

11

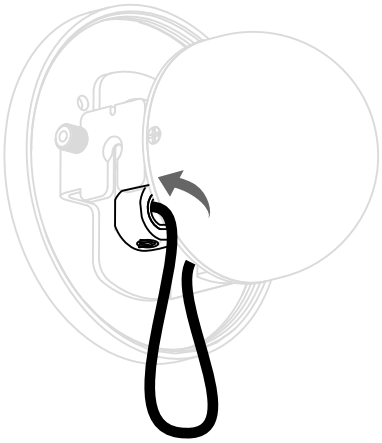

12

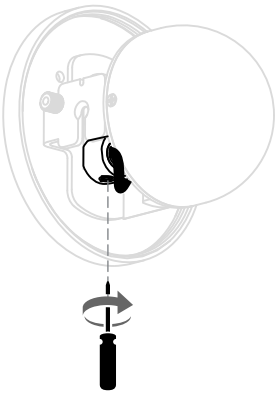

13

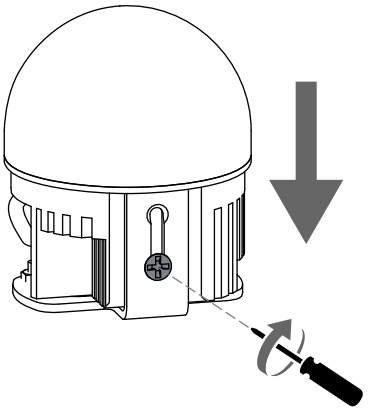

OPTIONAL

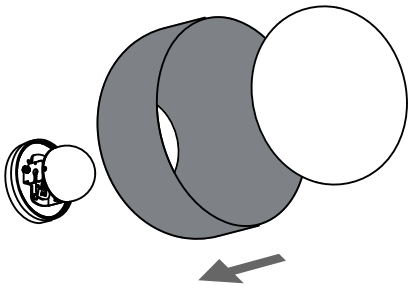

14

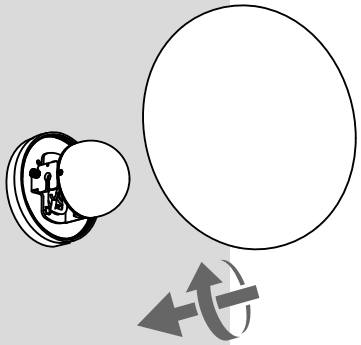

LIGHT FIXTURE

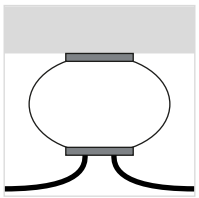

CEILING LIGHT
FIXTURE

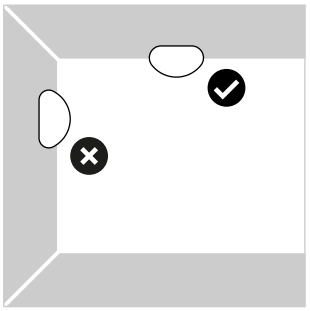

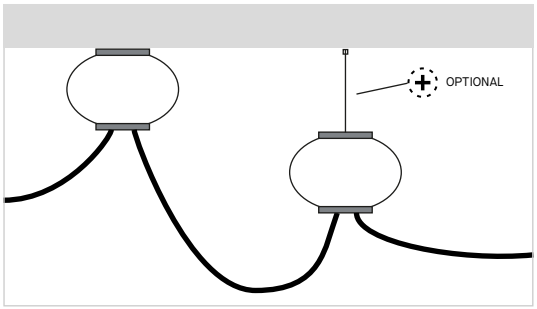

1

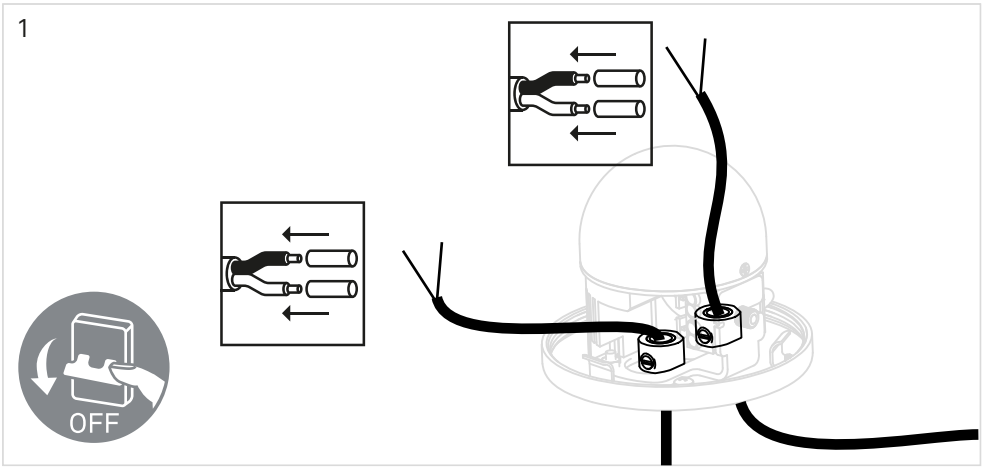

2

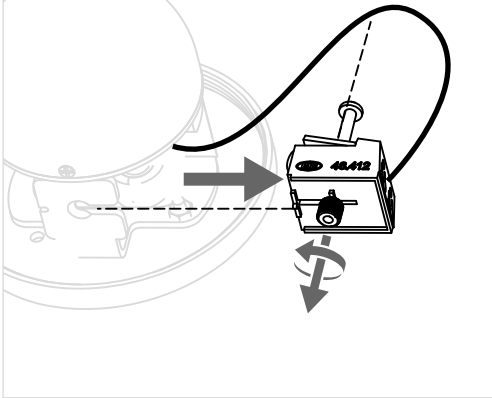

3

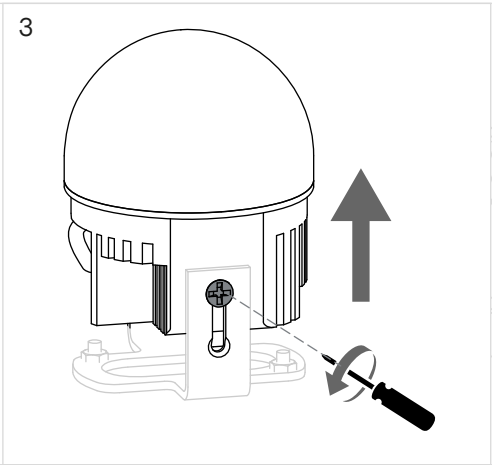

4

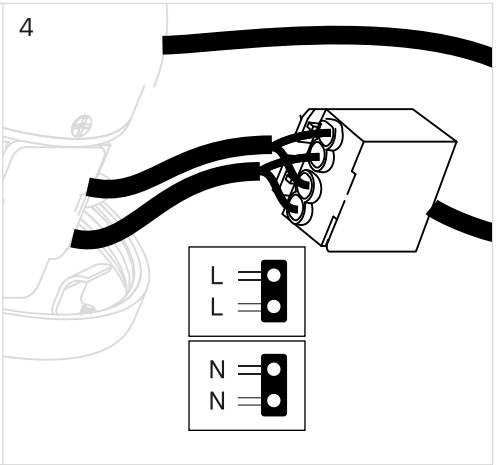

5

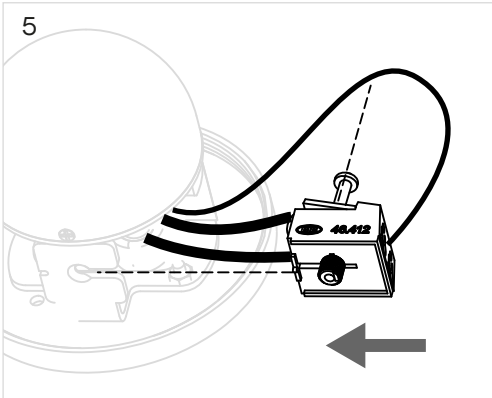

6

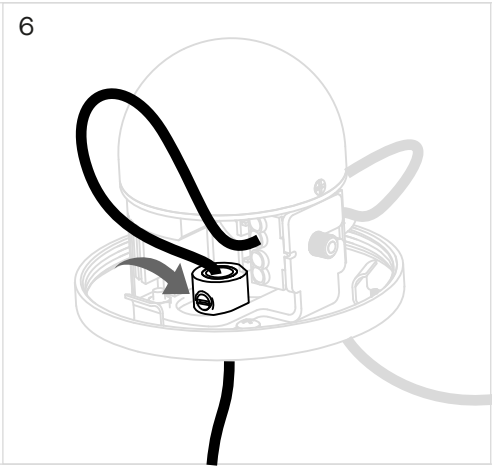

7

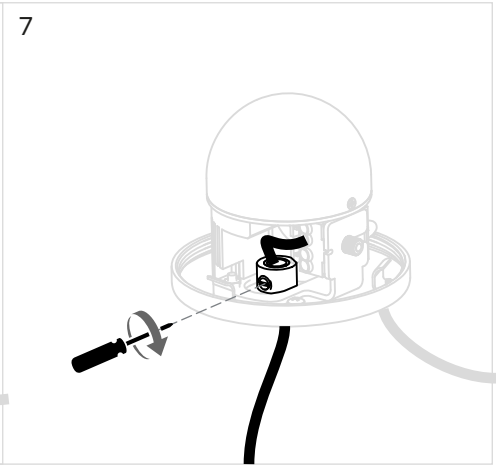

8

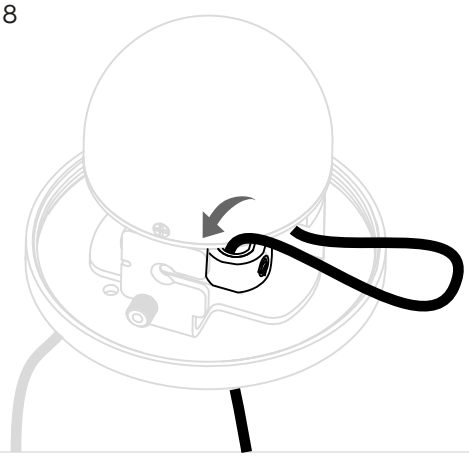

9

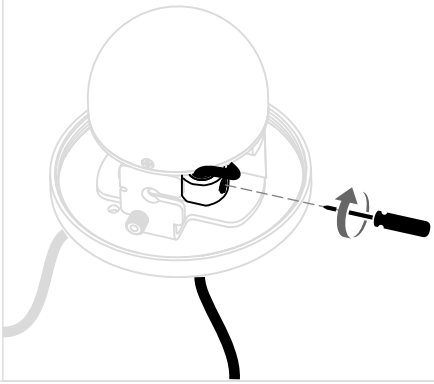

10

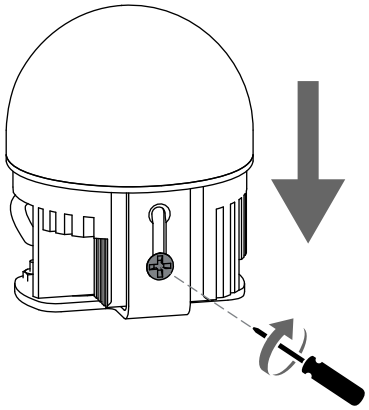

11

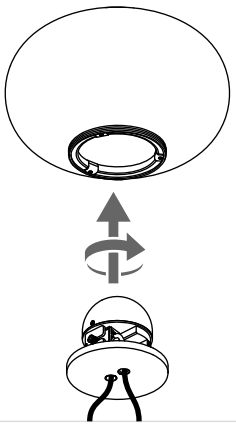

OPTIONAL

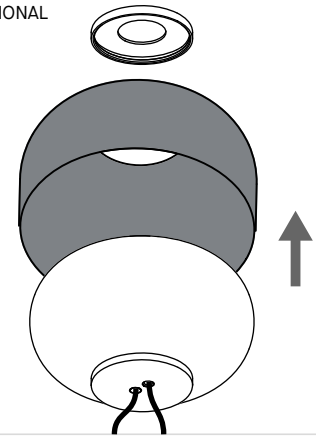

12

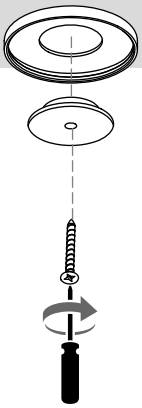

13

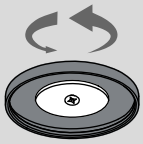

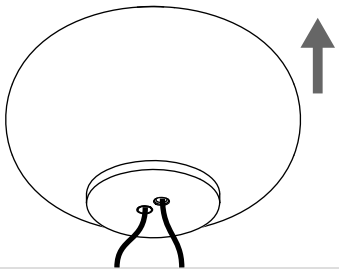

ACCESSORY

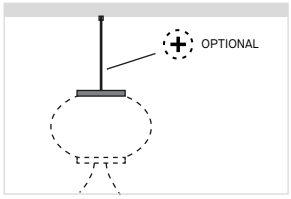

PENDANT KIT
FOR CEILING
FIXTURE

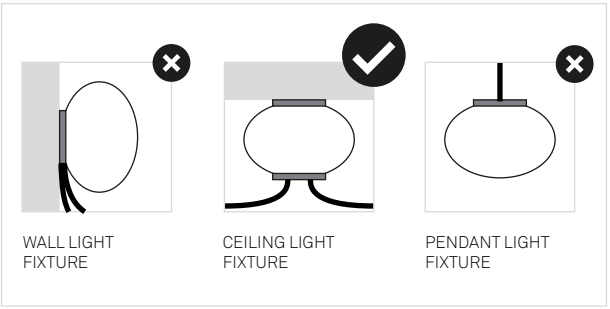

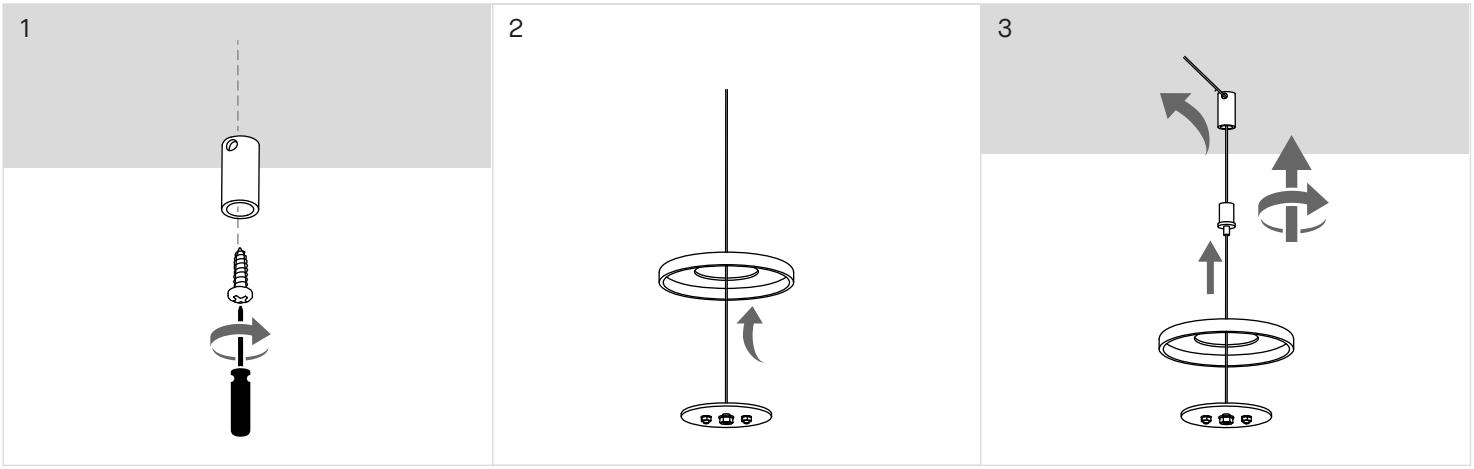

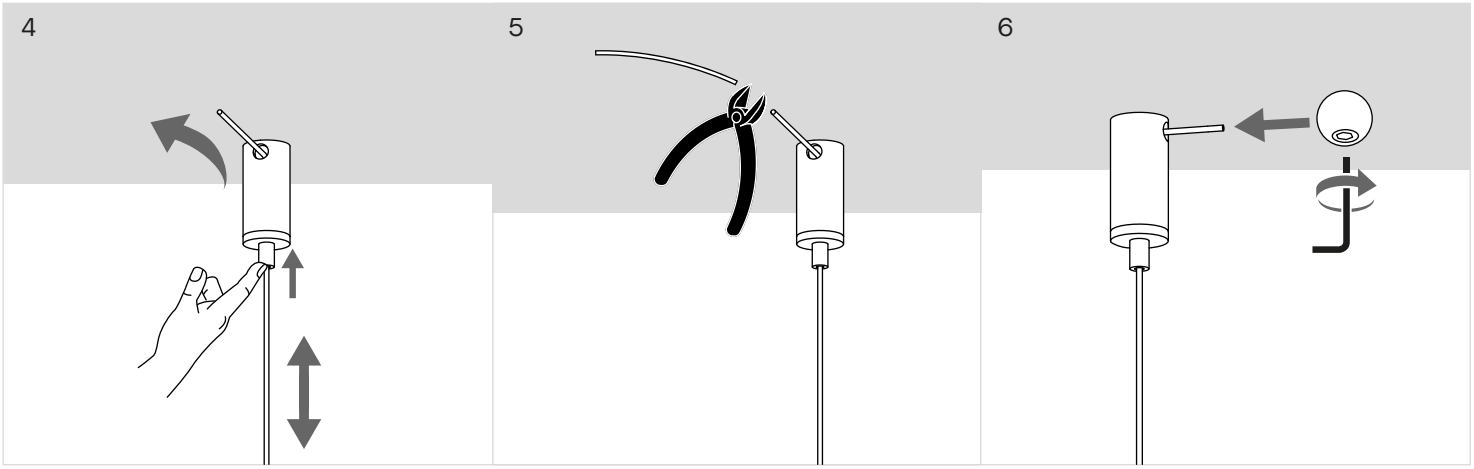

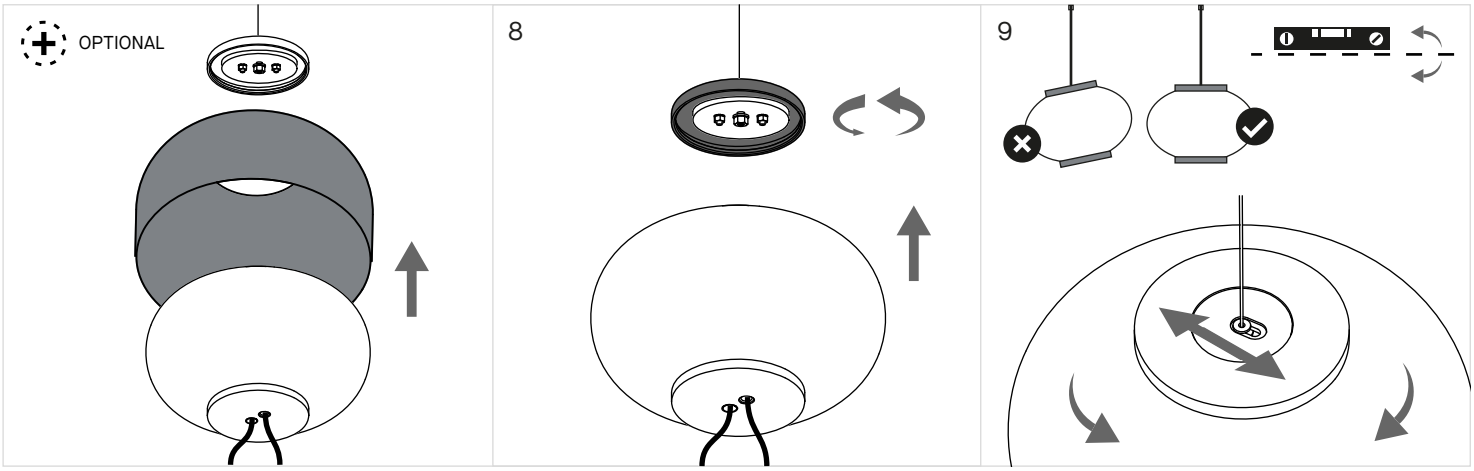

LIGHT FIXTURE

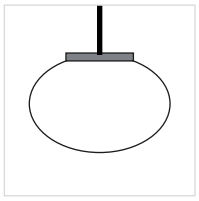

PENDANT LIGHT
FIXTURE

1

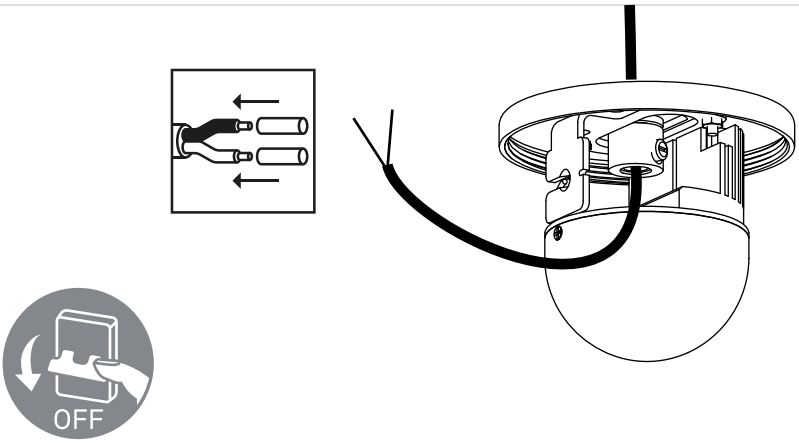

3

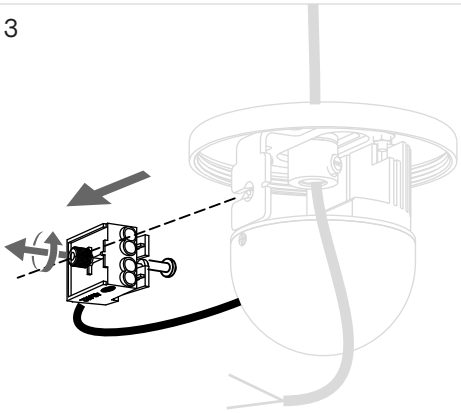

4

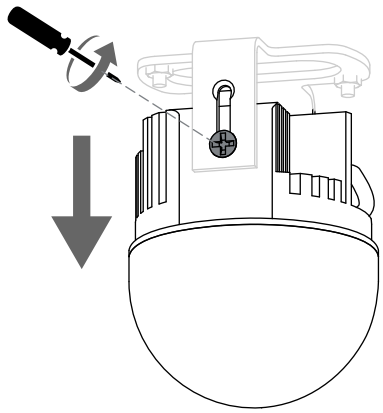

5

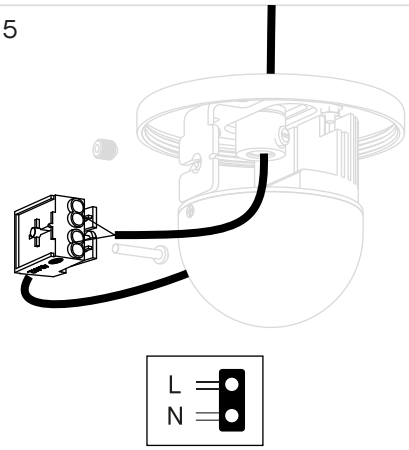

6

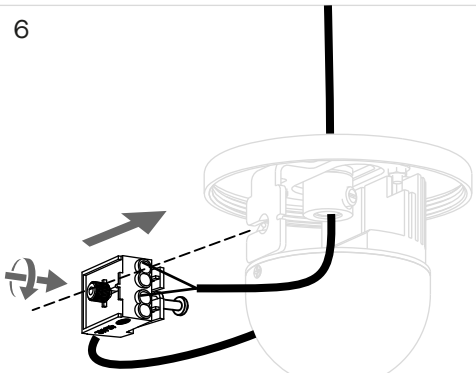

7

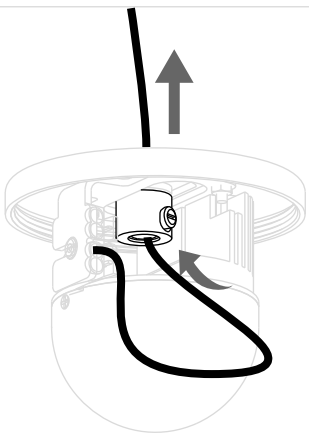

8

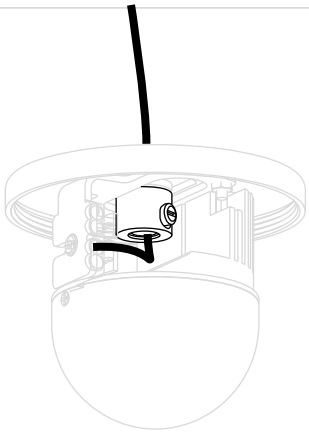

9

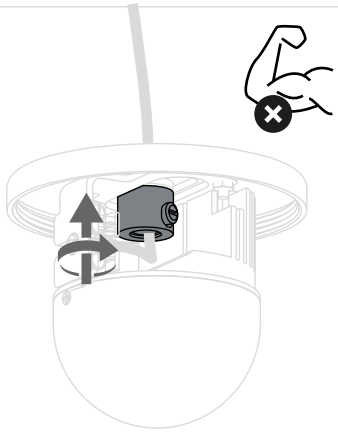

10

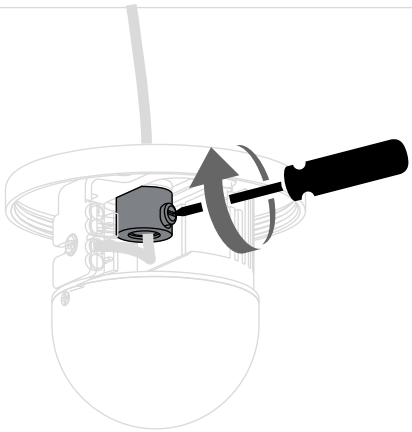

11

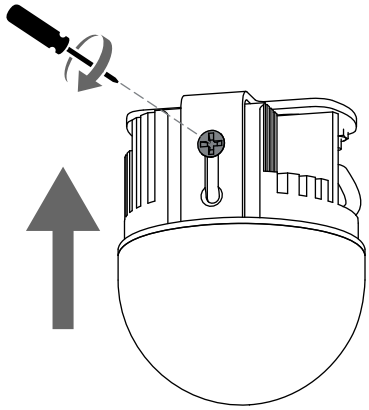

OPTIONAL

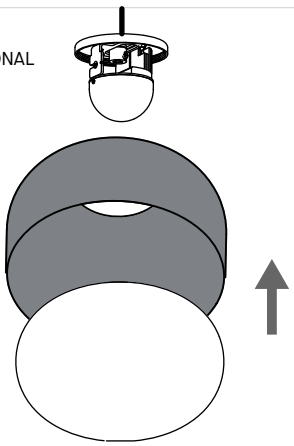

12

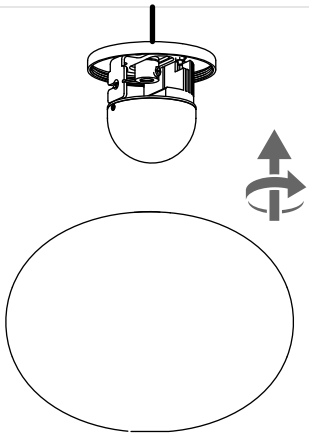

13

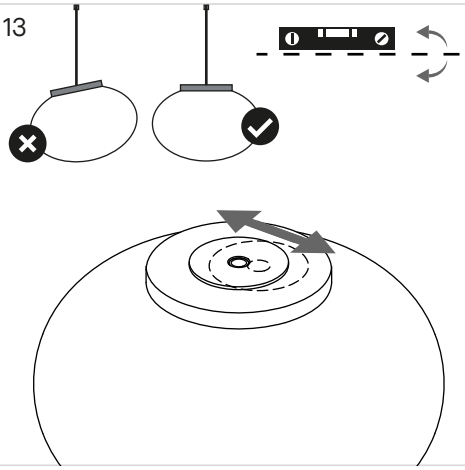

ACCESSORY

OPTIONAL



TEXTILE
WIRES

1

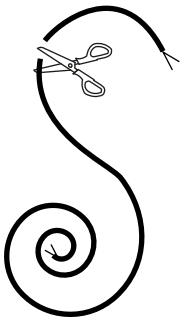

2



3

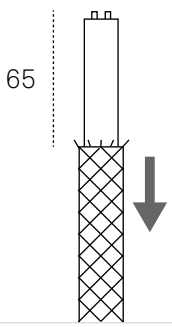

4

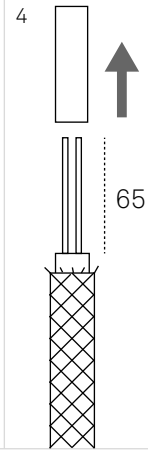

5

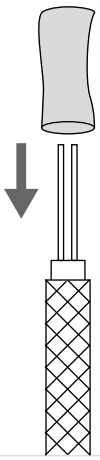

6

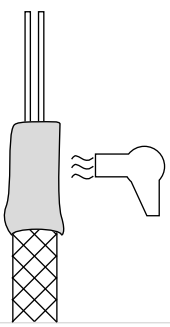

7

