Gamma F

STANDARD

LedsC4



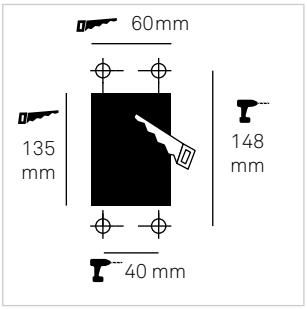

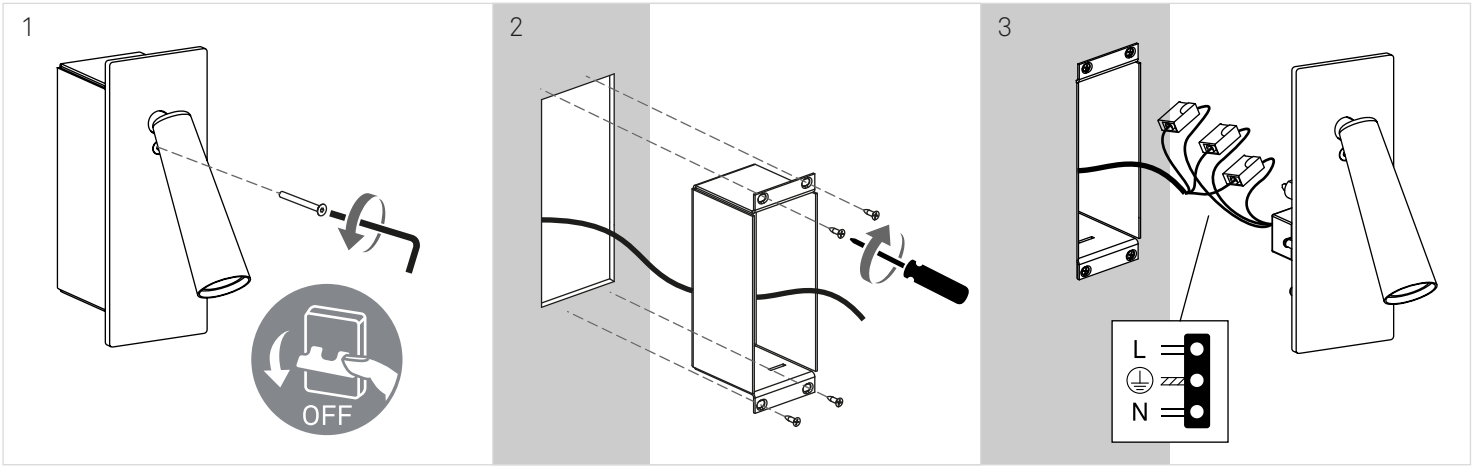

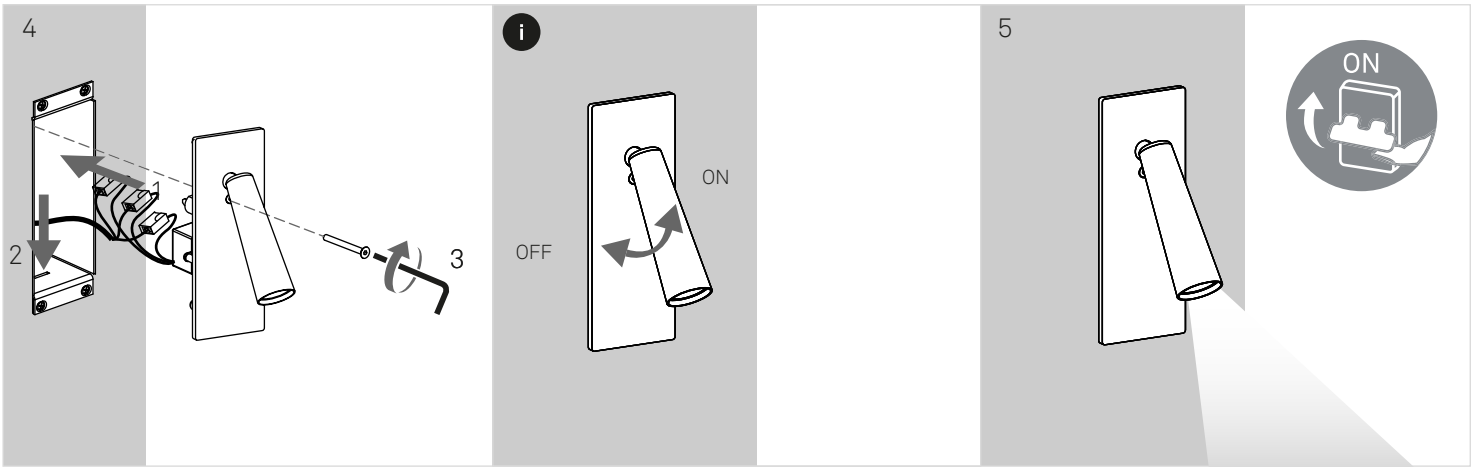

2-6-2026